DUJASE Vol. 2(2) 107-112, 2014 (January)

Road Traffic Noise Pollution Measurement and Monitoring (Computerized) of Dhaka City

M.S. Islam and T. A. Mithu

Department of Applied Physics, Electronics and Communication Engineering, University of Dhaka Dhaka-1000, Bangladesh

E-mail: sekulislam@yahoo.com, tonoyadmit@yahoo.com

Received on 24.04. 2011. Accepted for publication on 29. 05. 2012.

Abstract

Transportation sector is one of the major contributors to noise at the present time. The traffic noise environment in Dhaka city, in terms of standard noise indices has been worked out in the present study. Noise pollution has been assessed in 20 points of the city. To asses noise and noise pollution monitoring (computerized), the sound pressure levels in dB(A) have been recorded with a sound pressure level (SPL) meter in different locations of Dhaka city. The noise pollution bar graph indicating noise distribution has been made with those data. The sound distribution pattern of the graph showed the acceptable, non acceptable and noise danger zones. It is identified that noise levels are more than permissible limit in all 20 investigated locations of Dhaka city. It also reports a sample study of computerized noise measurement after creating noise deliberately. The automatic measurement was made by interfacing a SPL meter with a PC using an interfacing meter. A spectrum of the sample study relating SPL meter output vs. real time has been plotted automatically by the PC. According to the WHO document on the guidelines for community noise the allowable limit of sound level within human comfort is around 45 dB. But in our findings the noise level observed around different educational institutions such as AIUB (84.5 dB) and BRAC University (78.3 dB) and hospitals such as Bangabandhu Sheikh Mujib Medical University and BIRDEM (83.4 dB) are quite unacceptable. There is an imminent health risk to the exposed population and the study suggests control measures to be instituted on a priority.

Keywords: Anthropogenic, Sociocusis, Threshold shift[2], Data acquisition.

1. Introduction

Due to various activities of man, the composition and nature of environment get changed resulting in what is called as environmental pollution of the atmosphere or of water or of soil etc. Sound forms an important part of man's environment. On some ways, it is quite useful to us. But any sound when it becomes undesirable to the listener is considered as noise. In acoustics, noise is a mixture of many tones combined in a non-musical manner. Sound or noise is the form of energy giving the sensation of hearing and is produced by longitudinal mechanical waves in air. So sound has the characteristics of frequency, intensity and waveform. The decibel (dB) has been the basic unit of sound. The practical range of audible sound is 0 to 150 dB. 0 dB is the threshold of hearing. An average conversation gives 60 dB. The allowable limit of sound level within human comfort is around 45 dB. Any sound between 50 to 90 dB is considered as noise while 90 to 120 dB is considered to be health hazardous[1]. 120 to 150 dB noise can cause permanent deafness. The important chronic effect of noise is loss of hearing.

Noise is the byproduct of our industrialization and civilization. Among different types of noise pollutants, road traffic has been at the present time the predominant source of annoyance due to large number of automotive vehicles. Each year there is an increase in the number of vehicles in Bangladesh. Consequently, traffic noise is also increasing. Thus, primarily noise problem is the result of growing busy traffic. With the growth of industries and especially with noise associated with traffic there is a rising awareness of noise pollution in Bangladesh. So our aim is to keep our environment clean without curbing our activities. To clear the environment we are to understand the extent of damage caused to it by pollution. Appropriate control measures and management of noise issues can be planned provided we know what the level of pollution is. Dhaka city is the most important place of Bangladesh. Noise pollution is increasing day by day here and it's a great deal of problem for all inhabitants of this city. For the above reasons Dhaka city has been selected as an area to conduct survey and monitoring for road traffic noise.

2. The human response to noise and its impact

The hearing mechanism is the final recipient of sounds produced by audio systems. The ear consists of three parts outer, middle and inner ears. The inner ear has an organ of Corti which contains about 24000 fibers or hair cells which are attached to nerve endings. With the sound the hair cells respond and signal the brain through the nerves. Hearing declines from anthropogenic noise is called Sociocusis and hearing loss with age is called Presbycusis. A temporary decrease of the ability to hear is called a temporary threshold shift[2]. It occurs when exposed to loud sound. A permanent loss of hearing or a permanent threshold shift occurs after continued exposure to loud noise. As a general rule, the higher the sound level the less time it takes to induce a permanent threshold shift[2]. Noisy environment decreases deep sleep. The road side noise may alter the heart beat and respiration. People make more mistakes in their

work when noise is present. Some hazards of noise are listed in the table below.

Table 1: Some health hazard of noise[3]

Category/System	Hazards
NUISANCE	Loss of efficiency Irritation Sleep disturbance (insomnia) Speech interference Lack of concentration
OTOLOGICAL	Temporary hearing loss Permanent hearing loss
NEURO-HUMORAL	Cardiovascular diseases Hypertension Peptic ulcer Mental and Menstrual disorder Neuro-sensory and motor impairment.

3. The instrument used for measurement

The range of human hearing mechanism usually measured at 1 KHz. The amplitude of audible pressure wave may vary from threshold of hearing $2x10^{-5}$ to above 10^{8} N/m^2. Because of this large range, it is more convenient to express the magnitude of sound pressure level in logarithmic form in terms of decibels. SPL is defined in decibels (the basic unit of sound) as[4]:

SPL (Sound Pressure Level) = $20 \log P/P_{ref}$ dB

Where P is the rms or effective sound pressure and P_{ref} is the reference pressure of $2x10^{-5}$ N/m^2.

Sound level meter converts acoustic pressure into a directly proportional voltage indicated on a meter. To measure the sound pressure level, a wide range of measurement techniques are available. But here the accuracy of the result is very important. The simplest instrumentation available to determine sound level has been referred as a sound level meter. A schematic of a sound level meter is shown in Fig-1. The meter has the following elements:

1) A transducer (microphone) which is used to sense the sound pressure and convert pressure fluctuations into an electrical voltage.

2) An input amplifier, which is used to raise the electrical signal to a usable level.

3) A calibrated attenuator which is used to adjust the amplification to a value appropriate to the sound level being measured.

4) An indication instrument (meter) which is used to display the measured level calibrated in dB.

5) Frequency weighting networks which are used to modify the frequency characteristics of the instrument's response.

6) An output amplifier and calibrated output attenuator.

7) An output jack to carry the signal to additional instrumentation for further analysis.

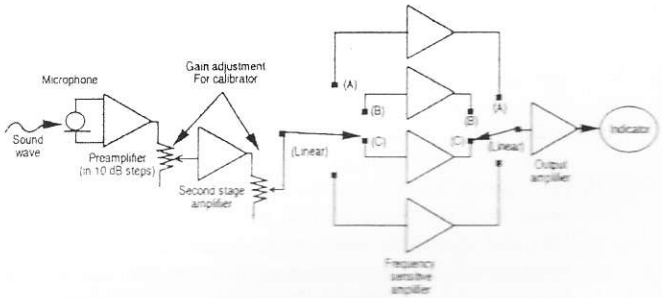

Fig. 1: A Schematic of a Sound Level Meter

3. Noise level measurement technique

A survey of the road traffic noise for the area of Dhaka city has been undertaken to ascertain the level of noise at different points of Dhaka city. Field measurements are made with a sound level meter. In UK the measurement that is used is not an average but an approximation to the maximum level. It is defined as the level in dB(A) exceeded for 10% of the time, L_{10} (pronounced L-TEN) during every hour over a period of 18 hours from 6 am to midnight on a typical working day. The average of the $18L_{10}$ found during this process is called the 18 hour L_{10}[5]. To do this sound levels have been noted down as shown on the meter at regular intervals (one every 10 seconds). Among the total readings, the top ten percent readings were deleted. The highest of the remaining ninety percent was then equivalent to the L_{10} value. In our study this L_{10} value has been taken during every hour over a period of 8 hours (From 9 AM to 5 PM). Then the average of the $8L_{10}$ found during this process is taken as the final value. With this measuring process the noise levels of different points of Dhaka city have been measured. We surveyed 20 major points of Dhaka city. A bar graph of sound pressure level in dB(A) vs. noise prone places is shown in fig-3. Bar diagram of noise level in front of Farmgate is also shown in fig-2.

Table 2: Measured road traffic noise level at different points of Dhaka city (8L_{10} values)

Sl No.	Different points of Dhaka City	Measured values in dB(A)
1	TSC (in front of Raju Vaskorjo)	83.9
2	Shahid Minar	82.1
3	DMC (Emergency Gate)	86.9
4	Doyel Chattar (Curzon Hall)	81.8
5	Nilkhet (New Market point)	87.2
6	Shahabagh (BSMMU & BIRDEM)	83.4
7	Dhanmondi (27 no, Satmosjid Road Crossing)	84.5
8	Banga Bazar	86.9
9	Gulistan (Golap Shah Mazar)	83.1
10	GPO (Zero Point)	82.9
11	Press Club	83.2
12	Paltan Moor	79.4
13	Bangla Motor	85.6
14	Karwan Bazar (SAARC Foara)	84.2
15	Farmgate	95.3
16	Bijoy Sarani	87.3
17	Prime Minister's Office	83.6
18	AIUB (Banani Campus)	84.5
19	BRAC University (Mohakhali Campus)	78.3
20	Isha Khan Road (R/A, D.U.)	47.0

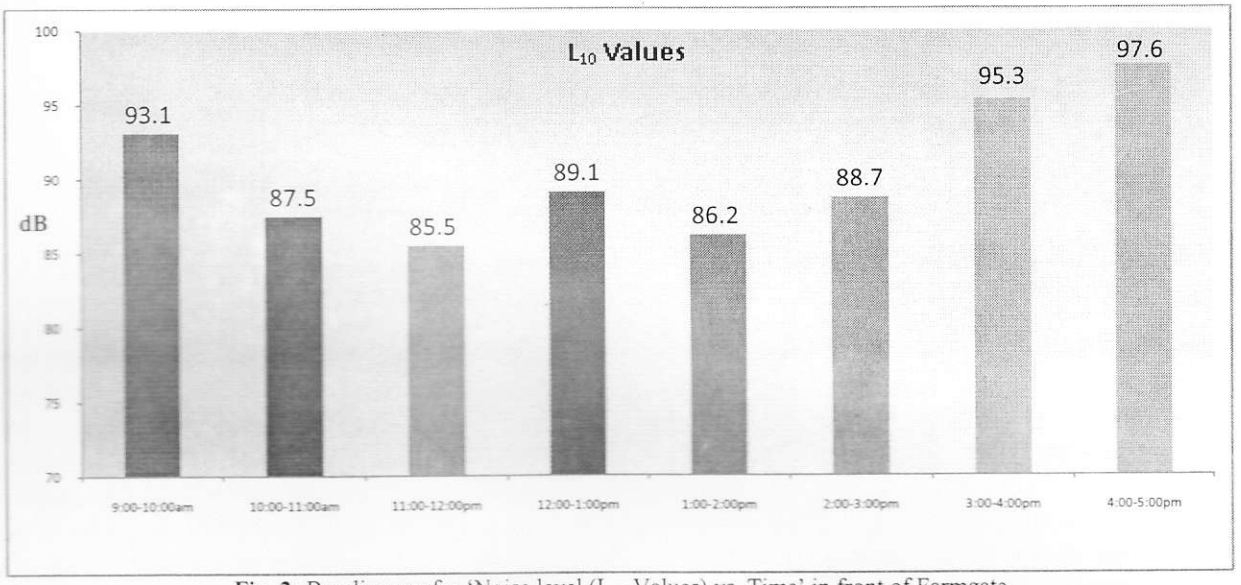

Fig. 2: Bar diagram for 'Noise level (L_{10} Values) vs. Time' in front of Farmgate

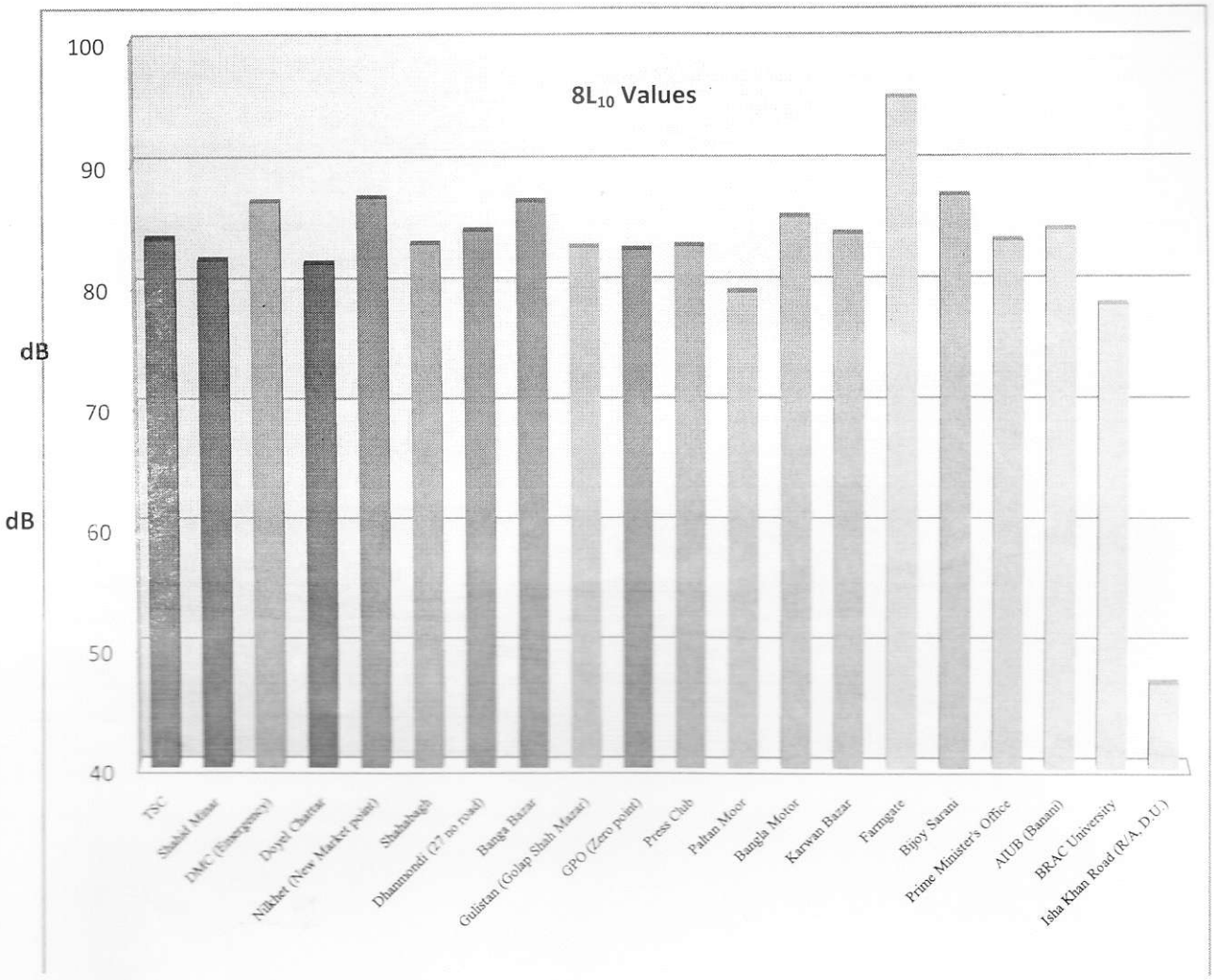

Fig. 3: Bar diagram of SPL ($8L_{10}$ Values) vs. different places

5. Noise Monitoring

A computerized road traffic noise level measurement has been done by interfacing the sound pressure level meter (SPL) with a PC using an interfacing meter. Interfacing can be defined as the joining of dissimilar devices in such a way that they are able to function in a compatible manner. So interfacing device is necessary to acquire data and to store into the PC for further interpretation and analysis. The output of the sound pressure meter has been connected to the PC via a real time data acquisition system. For this a digital interfacing meter has been used. The schematic of the monitoring and data acquisition is shown in fig-4(a). A sample measurement to monitor sound level for any period and at any interval at a particular point has been done. A sample sound has been produced deliberately and measured by the sound level meter and interfaced with a PC by using an interfacing meter. The experimental setup is shown in fig-4(b). Noise levels were measured at 1 second interval for 8 minutes. The PC stored the data of the sample and a spectrum was plotted automatically by using a program (Scope View). The spectrum of the sample study is shown in fig-5. This study reveals that any sound pollution at any point can be measured automatically by a computerized method for any time and can be monitored round the clock. Monitoring would have been done manually until data acquisition system was developed.

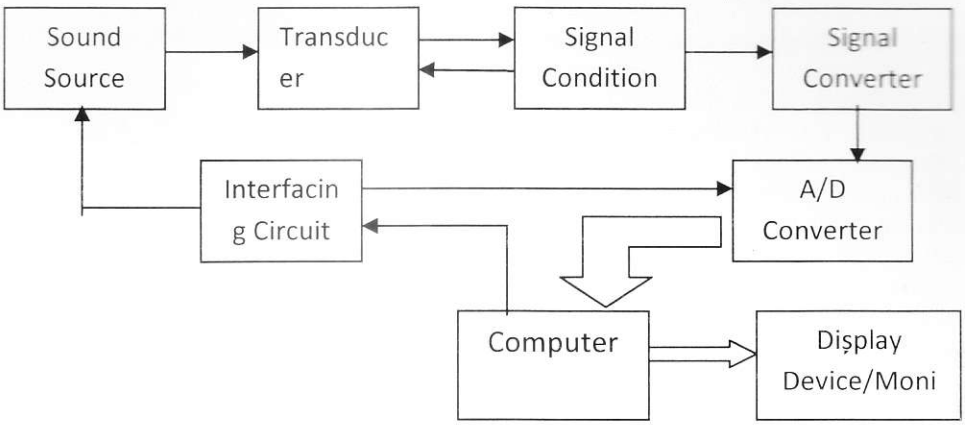

Fig. 4(a): Schematic of a noise pollution monitoring system (data acquisition)

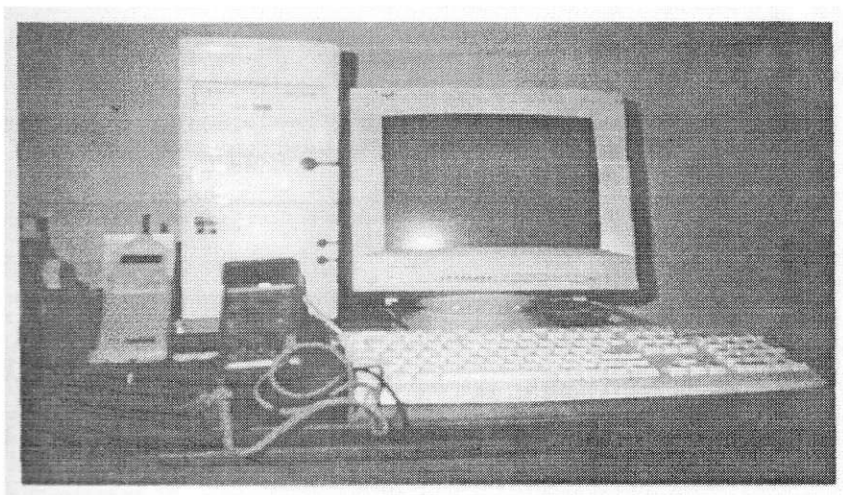

Fig. 4(b): Experimental setup of noise monitoring at Curzon Hall campus

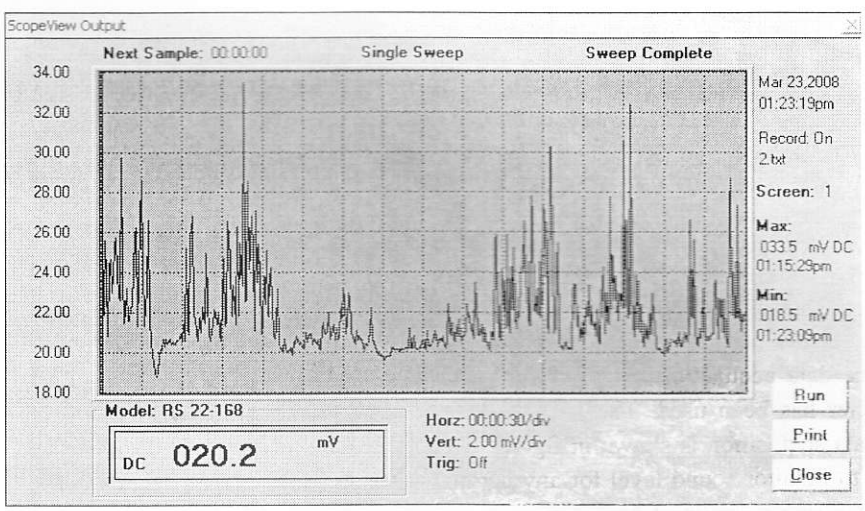

Fig. 5: Plot of the SPL output (voltage) vs. real time at Curzon Hall Point

The spectrum of the monitor gives output of the SPL meter in mV vs. real time. The voltage values can be converted into corresponding dB values by using the formula such as $dB = 20 \log V/V_o$, where, V = effective value and V_o = reference voltage. Reference voltage V_o can be calculated from reading of SPL meter in dB(A) and corresponding reading of the interfacing meter in mV (effective value). In our study reference voltage was calculated to be $V_o = 3.7x10^{-3}$ mV. So, any value of the spectrum voltage (effective value) can be converted into the corresponding dB(A) using the above formula.

6. Discussion

There are some facts that we encountered during the experimental study. The noise levels of most of the points of Dhaka city exceed the allowable limit. The surplus of decibels disturbs a normal conversation, the sleep and even normal process of thinking. SPL values of Dhaka city have been examined in 20 individual points. In case of most of the areas, the SPL values were higher during 9-11 a.m. During noon the values were decreased. But the values again went higher from 3:30 to 5 p.m. Thus the higher SPL values were found when people went to work and returned from those. During the traffic signal or traffic jam in these entire points one common thing we faced that the traffic jam caused the maximum noise because the drivers didn't actually shut down their engines or sometimes even continuously push the horns.

Educational Institute should be noise free so that students don't lose their concentration and obviously don't face any health hazards. It is very important to control noise in modern town like Dhaka, otherwise comfort of life by the advancement of science and technology would be impossible. Minimum and maximum traffic noise levels in Banepa town, Nepal[6], for the main road are 60.1 dB(A) and 110.2 dB(A). The corresponding minimum and maximum levels for the main road (according to our study) in front of Prime Minister's office are 58.3 dB(A) and 88.1 dB(A) respectively. Tolerated noise levels on the main roads for UK[6] are 70 dB(A) for basic noise level, 80 dB(A) for frequent peaks and 90 dB(A) for infrequent peaks at day time. It is inferred that the noise levels in Banepa town of Nepal are much more than our case and much above the permissible UK limit. In the present work we have measured only decibel sound level of vehicles. Other parameters like vehicle speed, heavy vehicle percentage, vehicle volume, etc. can be included in the study and it may give better results. A survey adopting questionnaire method amongst inhabitants of Dhaka city to gather secondary information about the sufferings of noise related health problems may be carried out in future.

7. Suggestions to control noise

Some noise must be curbed in any modern town, otherwise modern life thriving on the advancement of science and technology would be impossible. The following suggestions have been made to control noise:

- Noisy vehicles and sources of heavy noise need to be identified and prohibited inside and around the city.
- Irregular and unnecessary use of pressure horn by the drivers of truck, bus and other automotive vehicles should be checked.
- Flyovers and bypass roads should be constructed to protect traffic jam, which creates noise.
- Noise barriers like high walls, earth banking, solar panels, building structures etc for screening can be introduced.
- Decentralization with proper urban planning should be innovated to avoid or reduce traffic.
- Public awareness of the hazards of noise should be aroused.
- A specific legislation to curb the noise pollution should be acted on the basis of scientific investigation and information.

References

1. Chaatwal G.R., M.C Mehra, T. Nagahiro, M. Satake, T.Katyal, Mohan Katyal, 1995, 'Environmental Noise pollution and its control'; ANMOL PUBLISHING PVT.LTD.New Delhi.
2. Chiras Danniel D. 1985, 'Environmental Science, A frame work for decision making'; The Benjamin/Cummings Publishing Comp. Inc.
3. AKHTER RAIS, 1990, 'Environmental Pollution and health problems'; ASHISH PUBLISHING HOUSE, New Delhi.
4. Nakra B.C., K.K. Chaudhry, 1993, 'Instrumentation, Measurement and Analysis'; Indian. Institute of Technology, Tata McGraw-Hill Publishing Commination Ltd. New Delhi.
5. TRIVEDI P.R, GURDEEP RAJ, 1997, 'Noise Pollution'; Akshdeep Publishing house, New Delhi.
6. V.Krishna Murthy, Ahmad Kamruzzaman Majumder, Sanjay Nath Khanal, Deepak Prasad Subedi, "Assesment of traffic noise pollution in Banepa, a semi urban town of Nepal", Department of Environmental Science and Engineering, Department of Natural Science, Kathmandu University, P.O Box 6250, Kathmandu, Nepal, Kathmandu University Journal of Science, Engineering and Technology, Vol. 1, No. 1V, August, 2007.